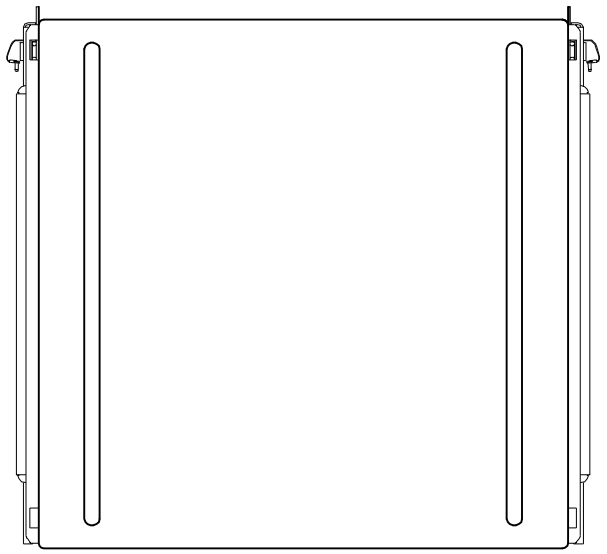

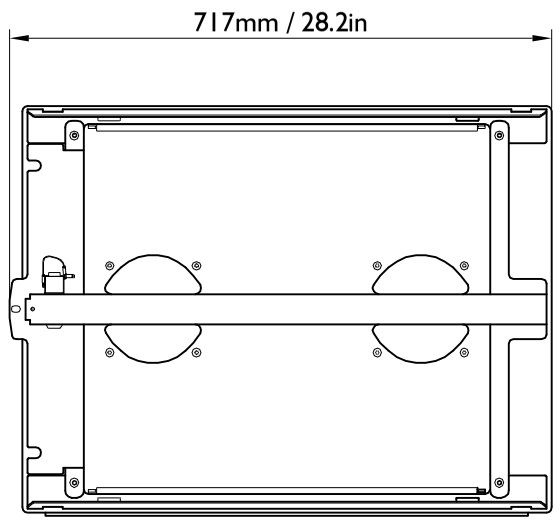

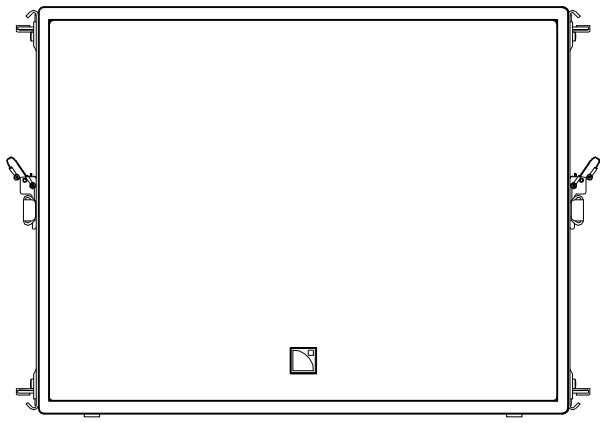

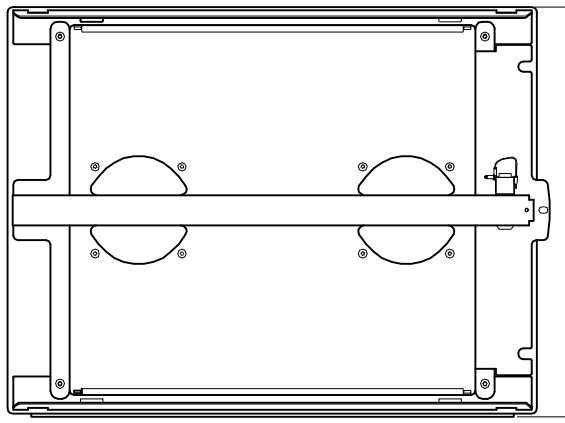

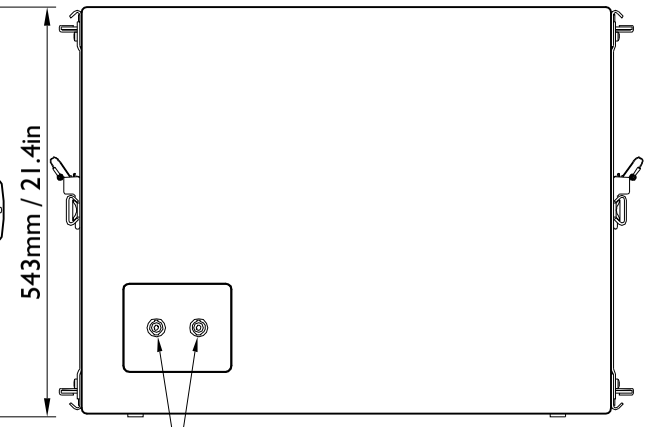

Input / Link connectors:
2 x 4-points SpeakON®

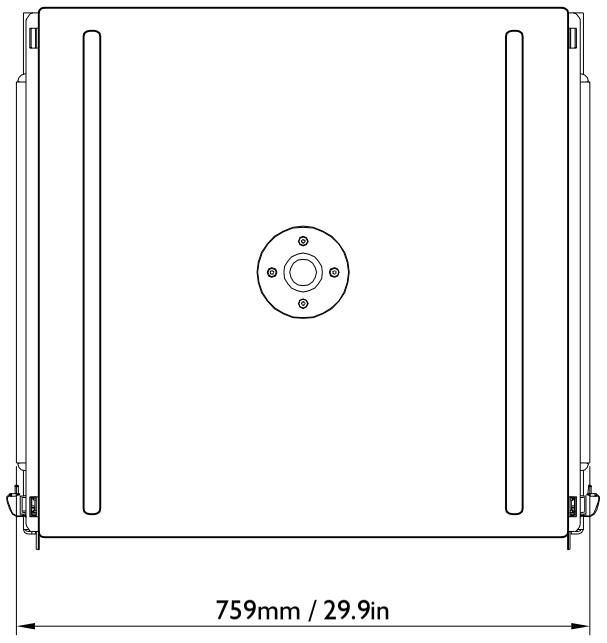

LOUDSPEAKER ENCLOSURE

SB18m

3D View

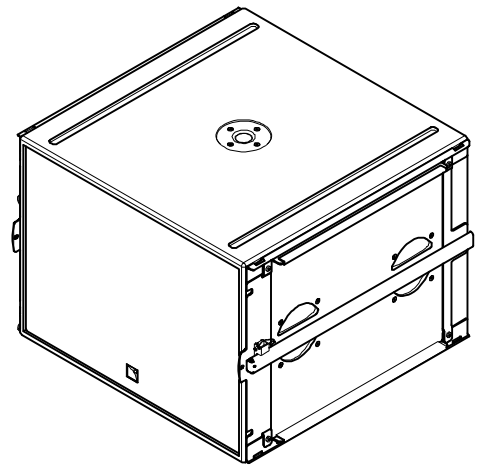

Drawed by:		DAVID.LY	
Date:		2014-01-08	
Scale:	1/10	Dim: mm / inches	
Format:	A3	Weight (Kg/lbs):	62Kg / 137lbs

Referential axis of symmetry

Revision:	Date:	Modification:

13 Rue Levacher Cintrat
Parc de la Fontaine de Jouvance
91462 MARCOUSSIS CEDEX
- FRANCE -
Tel: +33 (0)1.69.63.69.63
Fax: +33 (0)1.69.63.69.64
Email: application@l-acoustics.com

These drawing are the property of *L-ACOUSTICS* . All reproduction, copy or communication is forbidden without written permission.