LOUDSPEAKER ENCLOSURE

112P

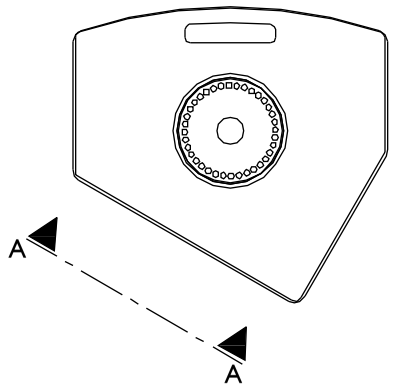

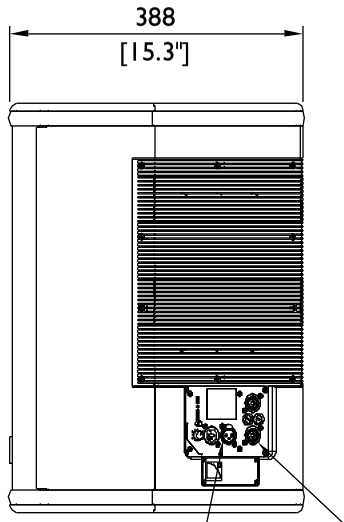

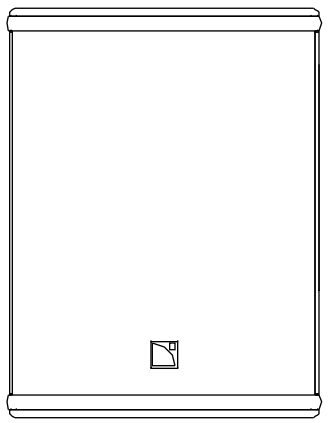

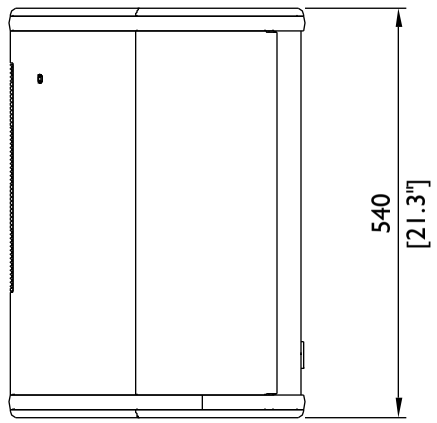

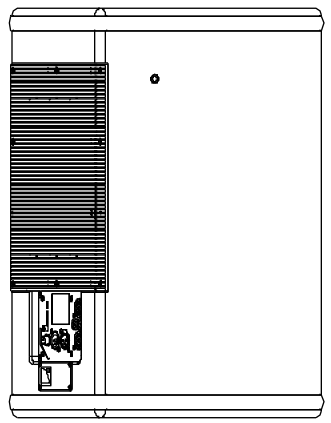

Input / Link connectors:
2 x 3-points XLR

Input / Link mains:
2 x Powercon®

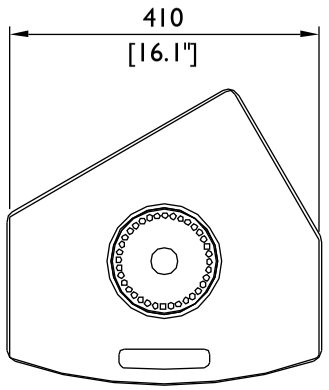

Vue A-A

Scale: 1:10

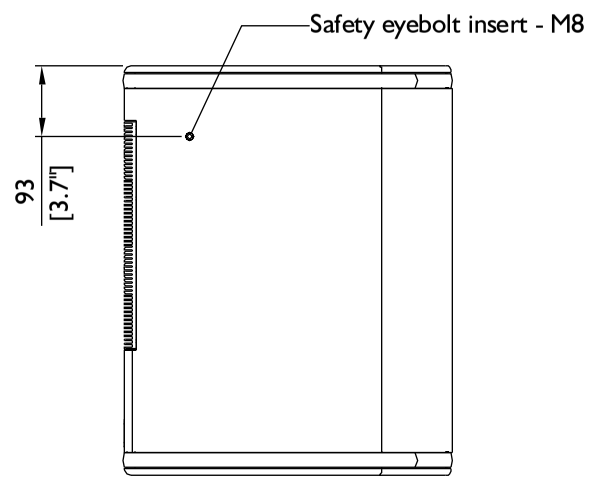

3D View

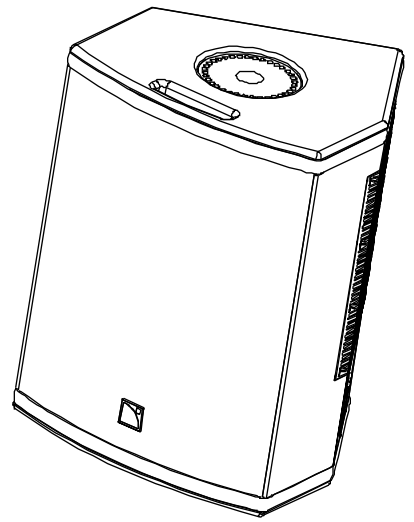

Drawn by:		DAVID.LY	
Date:		2014-06-03	
Scale:	1/10	Dim: mm / inches	
Format:	A3	Weight (Kg/lbs):	32Kg / 70.5lbs

Referential axis of symmetry

Rev:	Date:	Modifications:
A	2014-06-02	Added safety eyebolt insert, ref: 112P-V3

13 Rue Levacher Cintrat
Parc de la Fontaine de Jouvance
91462 MARCOUSSIS CEDEX
- FRANCE -
Tel: +33 (0)1.69.63.69.63
Fax: +33 (0)1.69.63.69.64
Email: application@l-acoustics.com

These drawing are the property of L-ACOUSTICS . All reproduction, copy or communication is forbidden without written permission.